DCEZD-62

Drag Chain Conveyor

The Model DCEZD-62 is a two strand drag chain conveyor designed to handle pallets. With EZLogic® Zone Controller, pallets are accumulated with zero pressure, reducing the possibility of collision that may result in product damage.

- 2 Strand Design
- EZDrive™ System (Individual zone drive)
- EZLogic® Accumulation System
- Modular Assembly
- Adjustable DCS-Type Floor Supports Available

U.S. Patent Numbers
5,862,907 • 7,243,781 • 7,591,366
Other Patents Pending.

OVERALL LENGTH "A"	FRAME WIDTH	19 7/8"	22 7/8"	25 7/8"	28 7/8"	31 7/8"	34 7/8"	37 7/8"	40 7/8"	43 7/8"	46 7/8"	49 7/8"
	STRAND CENTERS	18"	21"	24"	27"	30"	33"	36"	39"	42"	45"	48"
10'	WEIGHTS (Lbs.)	615	641	667	694	720	748	774	801	827	851	880
Per Foot Weight		62	64	67	69	72	75	78	80	83	85	88

HOW IT WORKS

The conveyor is made up of accumulation zones. Each zone contains an individual zone drive interfaced to Hytrol's EZLogic® Zone Controllers which sense product presence and control the accumulation and release of the zones by starting and stopping the zone drives.

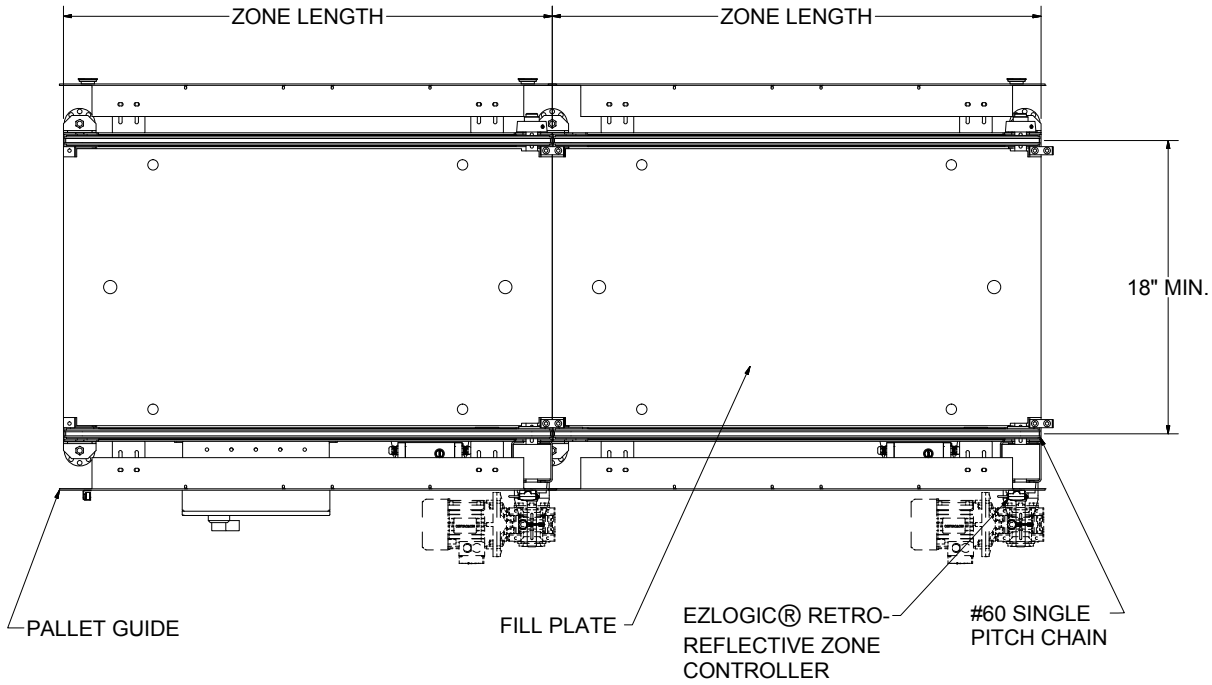

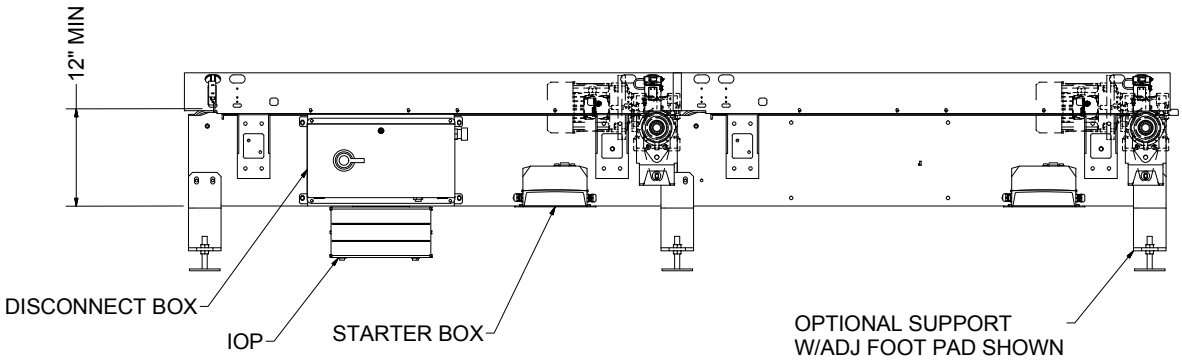

DCEZD-62

• STANDARD SPECIFICATIONS

CHAIN –#60 single pitch conveyor chain (straight sidebar).

CHAIN GUIDE – UHMW polyethylene.

FRAME – 11 1/8 in. x 7 ga. powder painted formed steel angle. 7 ga. formed coupling channels located at infeed and discharge ends of each module.

DRIVE SPROCKETS – Hardened #60 with 1 7⁄16 in. dia. steel shaft.

BEARINGS – Sealed, pre-lubricated, self aligning, ball bearings on drive.

EZLogic® ZONE CONTROLLER–Located in each zone. NEMA 1, 2, IP62. UL Approved.

ACCUMULATION ZONES–60 in. long sections with EZLogic® Accumulation.

IOP–Provides 27VDC, 100 watt power for EZLogic® accumulation system - contains slots for 4 input/output boards. Requires 120VAC or 230VAC single phase input.

MOTOR – ¾ HP – 230/460/575V– 3 PH. 60 HZ. gearmotor, shaft mounted at discharge end of zone.

CONVEYING SPEED –30 FPM.

CAPACITY–3,000 lbs. maximum per zone at 30 FPM.

FLOOR SUPPORTS–Now supplied as optional equipment.

DISCONNECT PANEL	230V	460V
	3 Ph. 60 Hz	3 Ph. 60 Hz
SINGLE OUTPUT	1-4 ZONES	1-8 ZONES
DUAL OUTPUT	5-8 ZONES	9-16 ZONES

† **Note**: Infeed Wake-Up Eye used only on terminating infeed end of conveyor. Not used when connecting to upstream EZLogic® conveyor through power supply isolation cable.

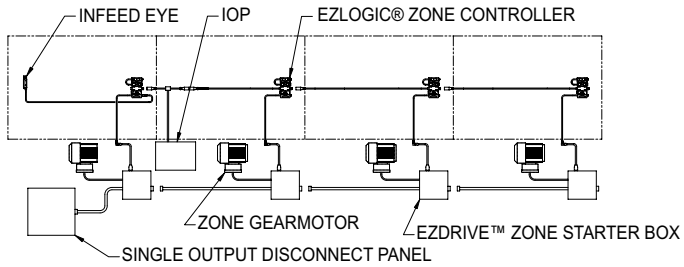

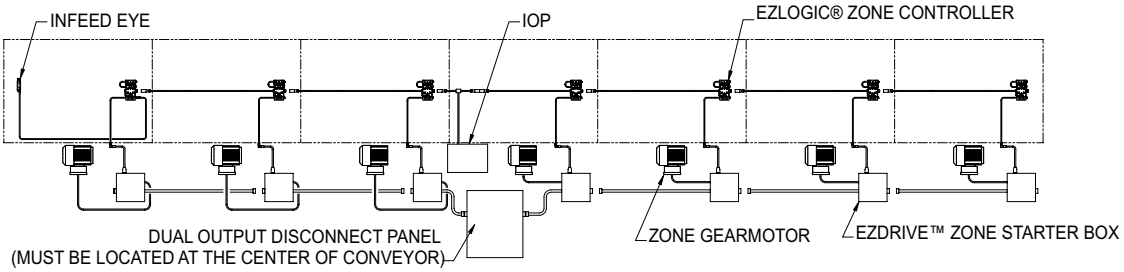

EZLOGIC® ACCUMULATION SYSTEM

Hytrol's EZLogic®, or "Electronic Zero-pressure Logic" Accumulation System, combines the sensing accuracy of photo-electronics with discrete electronic logic control without the use of a PLC or pneumatic logic components. The EZLogic® Accumulation System provides many features including:

Zero-Pressure Accumulation of Product

Zone Stop - Function is built in. Any zone may be transformed into a workstation by connecting a dry contact switching device to the auxiliary port of the EZLogic® Zone Controller. This feature is always used at the discharge end of the conveyor line, and may be used at any other location where a zone stop is required.

Dynamic Zone Allocation – Automatically adjusts the conveyor's zone length to accommodate the length of the product being conveyed. Improves conveyor efficiency and system flexibility.

Sleep Feature – Stops chains from running when no product is present, reducing noise, reducing energy consumption and extending chain life.

Unloading Zone Feature - Zone On Delay – Timer delays the zone immediately upstream from a removed load, preventing it from driving for a set time. This feature is ideal where loads are routinely removed from the conveyor with a lift truck.

Loading Zone Feature – Zone detects load being placed onto the conveyor with a fork truck and stops the zone from driving and automatically prevents any loads in zones upstream from entering loading area.

• OPTIONAL EQUIPMENT

FLOOR SUPPORTS–DCS Type floor supports are available with a wide range of adjustment. Specify top of chain elevation. One support required at every bed joint and ends of conveyor. Holes in feet for lagging to floor.

ACCUMULATION ZONES–48 in., 54 in., and 66 in. intermediate sections with EZLogic® Accumulation. Contact factory for other lengths.

CONVEYING SPEED–Speeds other than 30 FPM will require gearmotor change (contact factory).

EZDrive™ System–Variable Frequency Drive for adjusting conveying speed or adjusting acceleration and deceleration time.

EZLogic® – See EZLogic® Components Page.