800 SERIES
ROLLING SERVICE DOORS

ROLLING SERVICE DOORS TO MEET YOUR MOST DEMANDING AND RIGOROUS APPLICATIONS

The Wayne Dalton 800 Series rolling service door is designed to meet the tough requirements of virtually any commercial or industrial application. The 800 Series offers flexibility in substrate materials with choices of galvanized or prime steel, stainless steel, or aluminum. The 800 is also available with an Advanced Performance Option, that not only provides the durability and security of our high quality rolling steel doors, but the cycle of a high performance door.

Color options range from our standard four factory finish colors to a full range of 197 RAL powder coat choices.

WAYNE DALTON COMMERCIAL DOOR SYSTEMS

- SIZES UP TO 42' WIDE AND 40' HIGH
- FLAT AND CURVED 3" SLATS AVAILABLE
- WIND LOAD UP TO 55 PSF
- ADVANCED PERFORMANCE OPTION (SPRINGLESS AND HIGH CYCLE)

ROLLING SERVICE DOORS
800 SERIES

Popular in both interior and exterior applications, the Wayne Dalton 800 Series rolling service door features a galvanized, pre-painted curtain of minimum 22-gauge steel. The 800 Series doors have a standard wind load rating of 20 PSF*. An optional wind load rating of up to 55 PSF is available to cover Florida and Dade County wind load requirements.

Materials & Construction

Wayne Dalton's 800 Series rolling doors are composed of curved or flat-faced slats that provide a natural water-shed, helping to reduce corrosion. The slats are designed with free-acting interlocking joints that permit easy articulation when the door coils.

The 800 Series features a strong double-angle bottom bar that reinforces the lower edge of the curtain against wind pressure and permits varied lock, astragal, and safety edge options. This bottom bar is designed for easy installation and does not require fasteners protruding into the guide openings, so the bottom bar does not interfere with door operation.

Counterbalance assembly consists of a spring-barrel which serves as a load-carrying beam. It encases the counterbalance mechanism and provides the axis around which the curtain coils. (Deflection is limited to 0.033" per lineal foot of span.) If required, barrel rings of malleable iron or stamped steel may be provided to assure proper countebalance. Oil-tempered, torsion-type counterbalance springs are wound from heat-treated steel, providing accuracy in balancing the door. Barrel plugs connect ends of springs to barrel and tension rod. Tension rod of steel shafting holds fixed ends of springs and carries torsion load of spring counterbalance.

Spring tension adjusting wheel is normally mounted outside the bracket on end of tension rod. Inside adjusting wheel for tight side-room applications is available in limited sizes.

The hood covers the curtain coil and counterbalance mechanism.

Available Options

- Vision Slats/Panels
- Secur-Vent® (Flat Slat Only)
- Safety Edges
- Drop Stop Device
- Exhaust Ports
- Sloping Bottom Bars
- Powder Coated
- Motor Operators
- Cable Reels
- Mullions
- Thru-Wall Operation
- Stainless Steel or Aluminum Finishes
- Advanced Performance Option (Springless and High Cycle)

*Not applicable for high usage guide options.

Slat Profiles

No. 4 — Curved-faced single crown slat available in up to 16-gauge steel, up to 18-gauge stainless steel, or up to 14-gauge B&S aluminum (mill, clear, or bronze anodized). Depth of crown: ⅞", 2⅝" on centers.

No. 4 slat

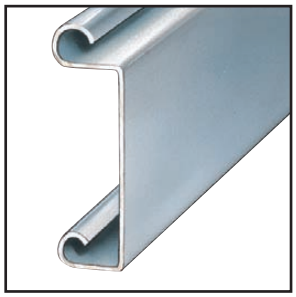

No. 14 — Flat-faced slat available in up to 16-gauge steel, up to 18-gauge stainless steel, or up to 14-gauge B&S aluminum (mill, clear, or bronze anodized). Depth of crown: ¾", 2 7/16" on centers.

No. 14 slat, shown with a Pass Door.

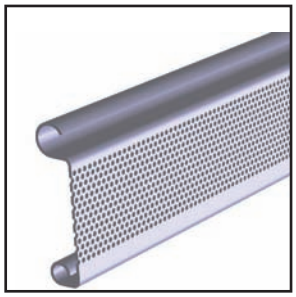

Secur-Vent®— Perforated slat provides optimal security and ventilation. Slat consists of 1/16" diameter holes offering 41% open area over length of each slat. Available in No. 14 flat slat up to 22' wide x 20' high.

Secur-Vent®

800 Series (Face Mounted)

Width A	HEIGHT B (OPENING HEIGHT)											
	9'0"			TO 14'0"			TO 18'0"			TO 18'0"		
	BRACKET SIZE	SIDE ROOM		BRACKET SIZE	SIDE ROOM		BRACKET SIZE	SIDE ROOM		BRACKET SIZE	SIDE ROOM	
	X & Y	R	L	X & Y	R	L	X & Y	R	L	X & Y	R	L
CHAIN HOIST OPERATED												
TO 20'0"	18–1/2"	8"	6"	22"	8"	6"	24"	8"	6"	26"	8"	6"
20'0" TO 25'0"	18–1/2"	8"	6"	22"	8"	6"	24"	8"	6"	26"	8"	6"
25'0" TO 28'0"	18–1/2"	8"	6"	22"	8"	6"	24"	8"	6"	26"	8"	6"
MOTOR OPERATED												
TO 20'0"	20"	8"	6"	22"	8"	6"	24"	8"	6"	26"	8"	6"
20'0" TO 25'0"	20"	8"	6"	22"	8"	6"	24"	8"	6"	26"	8"	6"
25'0" TO 28'0"	20"	8"	6"	22"	8"	6"	24"	8"	6"	26"	8"	6"
CRANK OPERATED–CONSULT FACTORY												

NOTE: Dimensions are for general reference only and not for construction purposes.

800 SERIES

800 Series (Between Jambs, Under Lintel)

Width A	HEIGHT B (OPENING HEIGHT)											
	9'0"			TO 14'0"			TO 18'0"			TO 18'0"		
	BRACKET SIZE	SIDE ROOM		BRACKET SIZE	SIDE ROOM		BRACKET SIZE	SIDE ROOM		BRACKET SIZE	SIDE ROOM	
	X & Y	R	L	X & Y	R	L	X & Y	R	L	X & Y	R	L
CHAIN HOIST OPERATED												
TO 20'0"	18–1/2"	9-1/16"	7-1/16"	22"	9-1/16"	7-1/16"	24"	9-1/16"	7-1/16"	26"	9-1/16"	7-1/16"
20'0" TO 25'0"	18–1/2"	9-1/16"	7-1/16"	22"	9-1/16"	7-1/16"	24"	9-1/16"	7-1/16"	26"	9-1/16"	7-1/16"
25'0" TO 28'0"	18–1/2"	9-1/16"	7-1/16"	22"	9-1/16"	7-1/16"	24"	9-1/16"	7-1/16"	26"	9-1/16"	7-1/16"
MOTOR OPERATED												
TO 20'0"	20"	9-1/16"	7-1/16"	22"	9-1/16"	7-1/16"	24"	9-1/16"	7-1/16"	26"	9-1/16"	7-1/16"
20'0" TO 25'0"	20"	9-1/16"	7-1/16"	22"	9-1/16"	7-1/16"	24"	9-1/16"	7-1/16"	26"	9-1/16"	7-1/16"
25'0" TO 28'0"	20"	9-1/16"	7-1/16"	22"	9-1/16"	7-1/16"	24"	9-1/16"	7-1/16"	26"	9-1/16"	7-1/16"
CRANK OPERATED–CONSULT FACTORY												

NOTE: Dimensions are for general reference only and not for construction purposes.

ROLLING SERVICE DOORS

800 SERIES

800 SERIES

MANUAL OPERATION

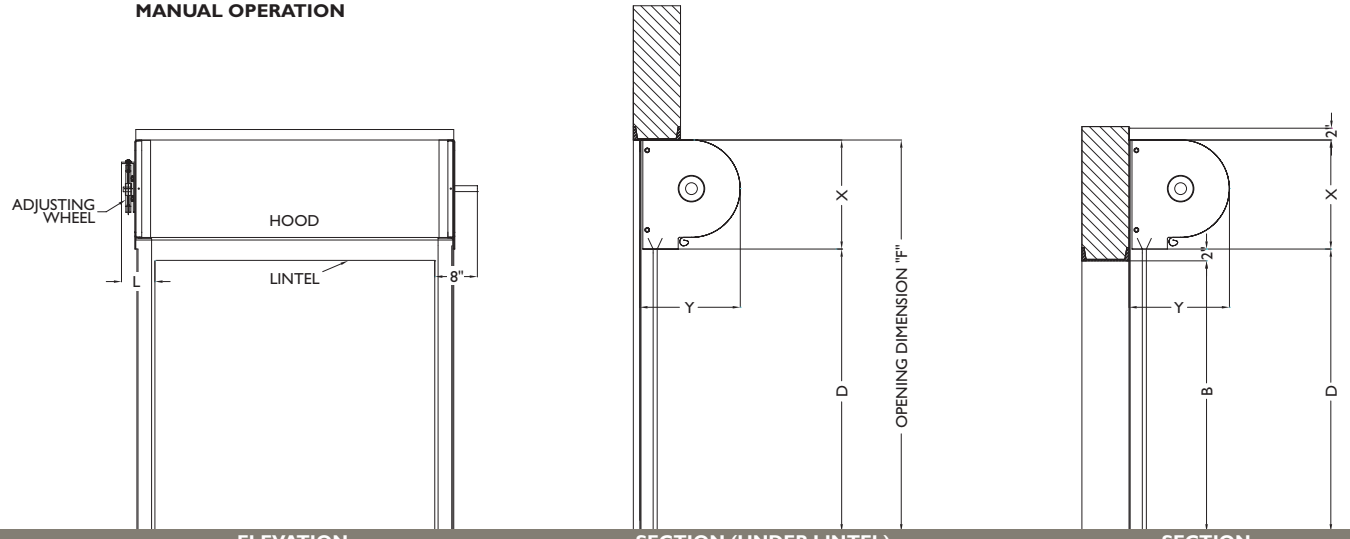

ELEVATION | SECTION (UNDER LINTEL) | SECTION

BRACKET MOUNTED POWER UNIT

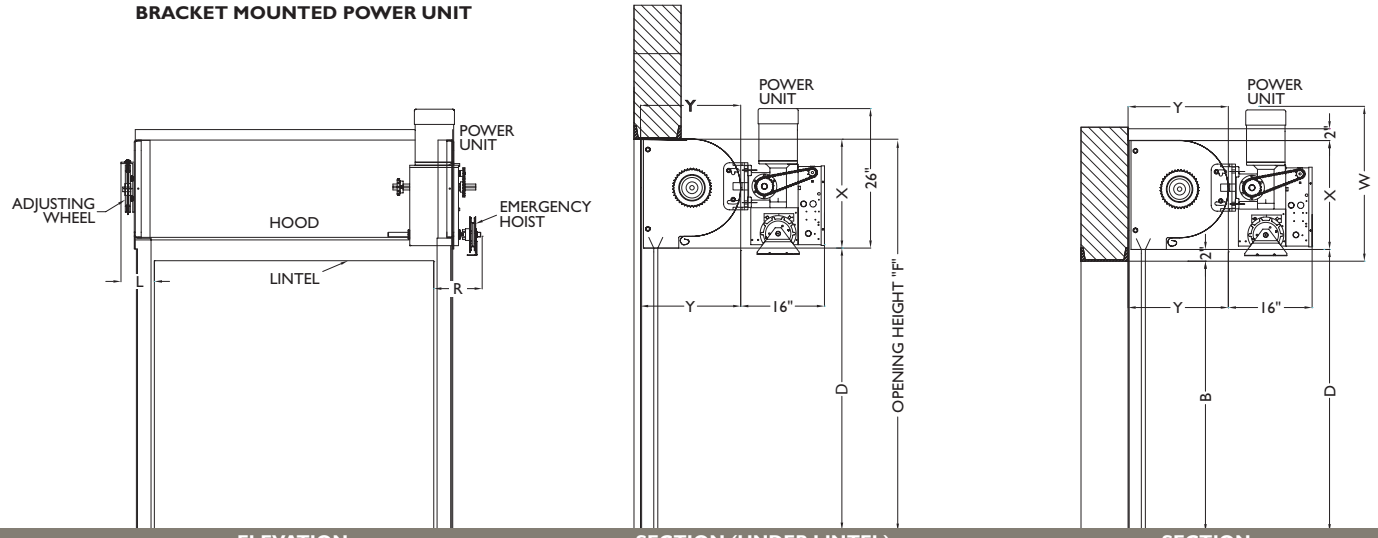

ELEVATION | SECTION (UNDER LINTEL) | SECTION

ANGLE OR ROLLED GUIDES – FACE MOUNTED TO MASONRY

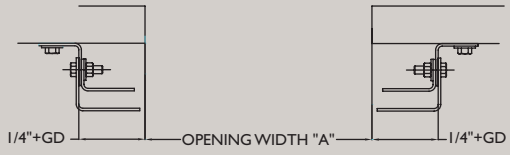

ANGLE OR ROLLED GUIDES – FACE MOUNTED TO STEEL

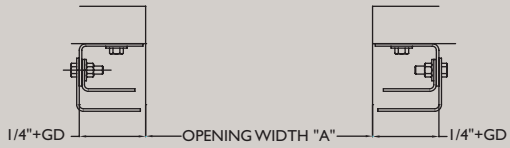

800 Series Door	
GD	WIDTH
2-3/4"	TO 28'0" WIDTH
3-1/4"	TO 30'0" WIDTH

ANGLE GUIDES – MOUNTED BETWEEN JAMBS

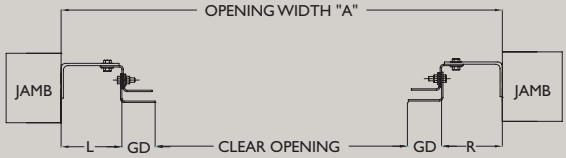

ROLLED GUIDES – MOUNTED BETWEEN JAMBS

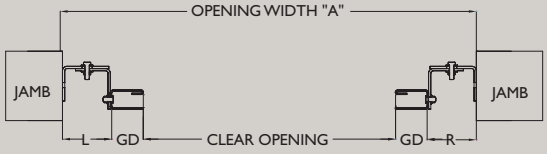

COMMON GUIDE MOUNTING OPTIONS

CHAIN HOIST OPERATION

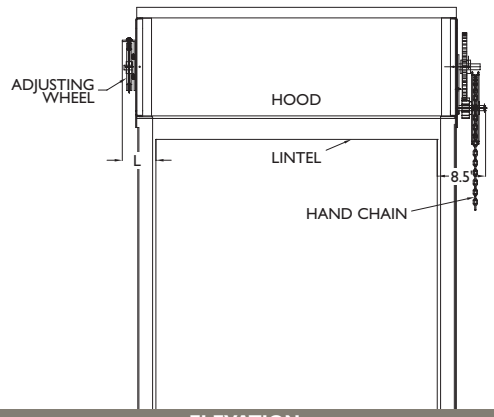

ELEVATION

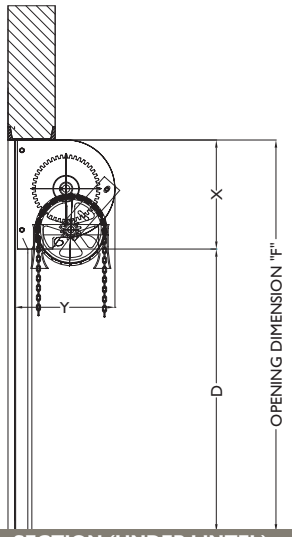

SECTION (UNDER LINTEL)

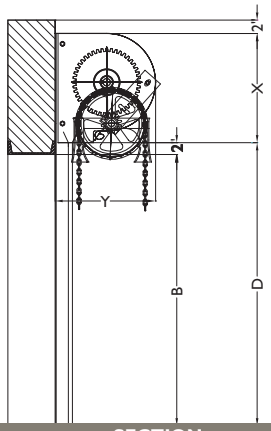

SECTION

WALL MOUNTED POWER UNIT

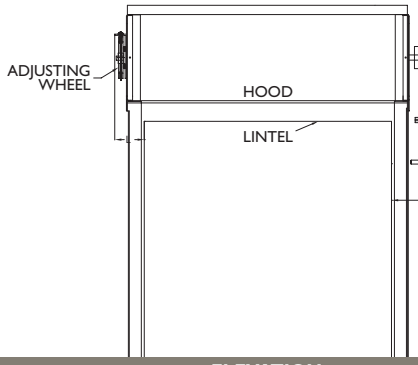

ELEVATION

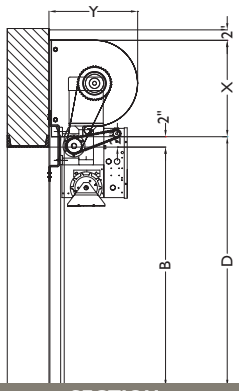

SECTION

THRU-WALL MOUNTED POWER UNIT

Note: 20" sideroom required on opposite door side for power unit

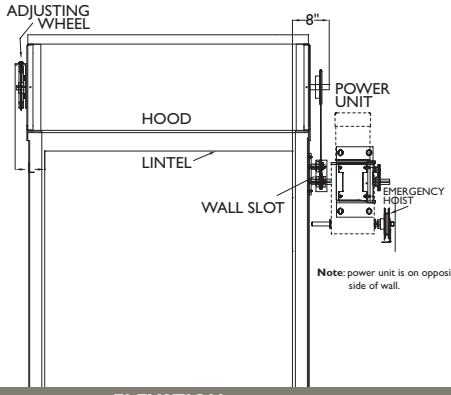

ELEVATION

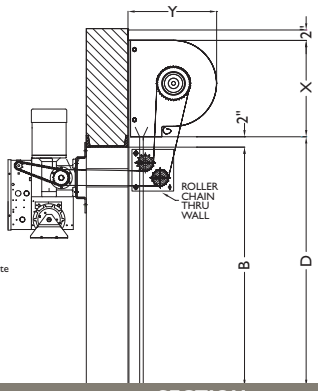

SECTION

ROLLING SERVICE DOORS

800 SERIES WITH ADVANCED PERFORMANCE OPTION

Direct Drive Motor
Comes standard with advanced gearbox design and features specially designed gear teeth that spread the drive and shock loads over a larger tooth contact area for reduced maintenance costs and increased durability.

Interior Hood Assembly
Protects direct drive motor, barrel, chain, stop lock brake and sprocket from dirt and debris for a clean look and increased durability. Optional sloped hood available for exterior mounted applications. (End caps not shown).

Curtain
Galvanized and powder-coated with special hardening additive. Optional stainless steel and aluminum versions are available. Slat #14 only.

Sensing Edge
Self-monitoring sensing edge is standard and reverses closing door upon contact.

Built-in Safety Features
The Advanced Performance Option comes standard with elite C-channel photo cells which include impact-resistant steel guards.

Unique Brake System
The Advanced Performance Option's unique stop lock brake system protects against uncontrolled curtain travel.

NEMA 4X Control Panel with Built-in Variable Frequency Drive
Allows door to close at a slower speed than it opens for added safety and less wear on the door, motor, and components. Easy to install and program with flush controls. LCD readouts indicate door action, alarm and fault conditions. Includes built-in timer and non-resettable cycle counter for maintenance and service reminders.

800 SERIES WITH ADVANCED PERFORMANCE OPTION

TECHNICAL DATA	
Application:	Interior/Exterior
Mounting position (motor/control panel)	Interior/Exterior - face-of-wall mounting only for maximum opening space and reduced door damage.
Models	800 Series Advanced Performance Option.
Opening size	Maximum width - up to 20 ft. / Maximum height - up to 20 ft. Maximum total square footage - up to 400 sq. ft. dependent on door weight.
Opening/Closing speed	Opening speed - 20" per second Closing speed - 12" per second
CONTROL & DRIVE SYSTEM	
Motor	Direct drive, (1/2 HP)(1 HP)(2 HP) dependent on door size, hypoid gear motor/brake assembly in 208/230/460 VAC, 3 Phase voltage. Specify right hand or left hand mount when ordering.
Control panel	Variable Frequency Drive with soft start/stop, self-diagnostics, voltage, built-in timer to close, and non-resettable cycle counter.
Protection	NEMA 4 - protection against falling dirt, rain, sleet, snow, windblown dust, splashing water, and hose-directed water. NEMA 4X on control panel and junction box include corrosion protection.
CURTAIN	
Material	Steel slats standard. Aluminum or stainless steel optional. Size availability will vary depending on material selected.
Colors	Gray or beige powder coat standard with special hardening additive for durability in high cycle applications. Optional: 197 RAL colors available.
Standard safety features	Self-monitoring electric sensing edge reverses closing door upon impact. Guide mounted photo-electric sensors with impact protecting steel guard. Unique stop lock brake system provides you peace of mind.
Available options	Push buttons, loop detectors, radio control, motion detectors, additional photo-electric sensors, horns, strobe lights, or any combination thereof. Considerable thought should be given to the choice of actuators based on the type of traffic and traffic flow through the opening. Auxiliary inputs included for external actuators such as third party card readers.

Slat Profile **#14 slat**

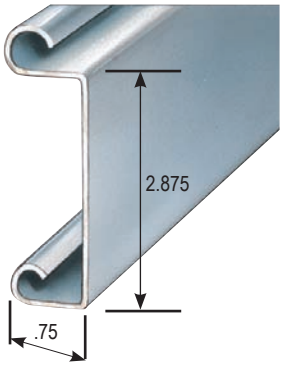

ROLLING SERVICE DOORS

800 SERIES WITH ADVANCED PERFORMANCE OPTION

800 SERIES WITH ADVANCED PERFORMANCE OPTION

Face-of-Wall Mounted

The Advanced Performance Option can be mounted on the face of the wall instead of between the door jambs for maximum opening space and reduced door damage.

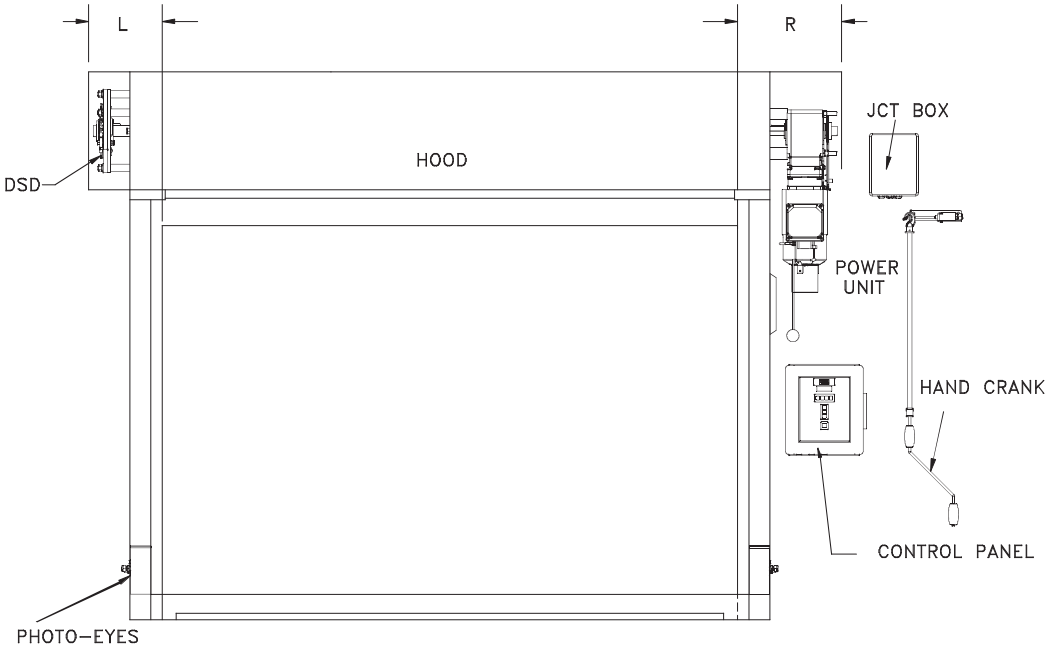

ELEVATION

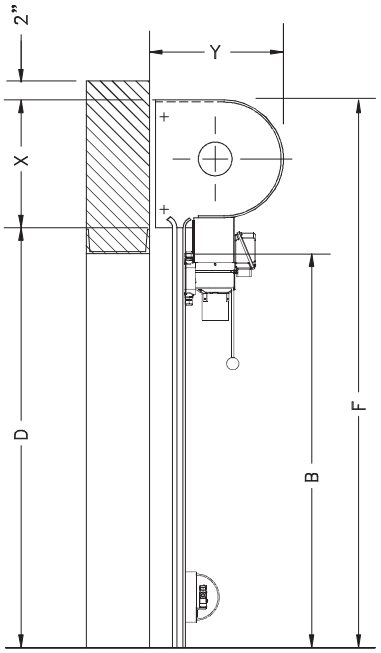

SECTION

OPENING HEIGHT (Y)	
Through 9'0"	16"
Through 14'0"	18"
Through 20'0"	20"

800 SERIES

Note to specifiers: Words in brackets indicate frequently specified and highly recommended options.

PART I – GENERAL

1.01 Work Included

A. The opening will be equipped with Wayne-Dalton 800 Series rolling doors.

1.02 Related Work

A. Opening preparation, miscellaneous or structural metal work, access panels, finish or field painting, field electrical wiring, wire, conduit, fuses, and disconnect switches are in the Scope of Work of other divisions or trades.

1.03 Reference Standards

A. **ANSI/DASMA 203** – American National Standards Institute Specifications for non-rated fire rolling doors published by Door & Access Systems Manufacturers Association International.

B. **ASTM A123** – Zinc [hot-dipped galvanized] coatings on iron and steel products.

C. **ASTM A229** – Steel wire, oil-tempered for mechanical springs.

D **ASTM A-653-94** – Steel sheet, zinc-coated [galvanized] by the hot-dipped process, commercial quality.

E. **ASTM E330** – Structural performance of exterior windows, curtain walls, and doors by uniform static air pressure difference.

1.04 Quality Assurance

A. Rolling doors and all accessories and components required for complete and secure installations shall be manufactured as a system from one manufacturer.

1.05 Systems Description

A. Rolling Door: Type:
Model 800

B. Mounting: [steel] [wood] [masonry] jambs

C. Operation: [manual push-up] [crank] [chain hoist] [motor] [motor with chain hoist] [advance performance operation]

D. Material: Galvanized steel with polyester finish or powder coated paint

1.06 Submittals

A. Shop Drawings: Clearly indicate the following:
1. Design and installation details to withstand standard windload.
2. All details required for complete operation and installation.
3. Hardware locations.
4. Type of metal and finish for door sections.
5. Finish for miscellaneous components and accessories.

B. Product Data: Indicating manufacturer's product data, and installation instructions.

1.07 Delivery, Handling, Storage

A. Deliver products in manufacturer's original containers,dry,undamaged, seals and labels intact.

B. Store and protect products in accordance with manufacturer's recommendations.

1.08 Warranty

A. Standard manufacturer's one year warranty against defects in material and workmanship.

B. Advanced performance warranty: manufacturer's two year warranty on 300,000 cycles for components and manufacturer's five year warranty for motor.

PART II – PRODUCTS

2.01 Curtain

A. Curtain will be composed of interlocking [22, 20, 18,16 gauge galvanized steel] [16,14 B&S aluminum] [22, 20,18 stainless steel] slats, roll-formed per ASTM standards and designed to withstand a 20 PSF windload. Ends of alternate/continuous slats will be fitted with metal endlocks/windlocks.

B. Advanced performance curtain will be composed of interlocking #14 flat slats [22 gauge galvanized steel] [22 gauge stainless steel] [16, 18 gauge B&S aluminum] slats with [26 gauge galvanized steel] [22 gauge B&S aluminum] back slats, roll formed per ASTM standards. Curtain designed to withstand a 20 PST windload. Ends of alternate/continous slats will be fitted with metal endlocks/windlocks.

C. Bottom Bar will consist of two equal steel [stainless steel] [aluminum] angles, .121" minimum thickness, to stiffen curtain, with astragal. When required for additional security, provide [slide bolts] [cylinder locks] on the bottom bar operable from [coil side] [both sides].

2.02 Guides

A. Guides will be roll-formed steel channel bolted to angle or structural grade, three angle assembly of steel [stainless steel] [aluminum] to form a slot of sufficient depth to retain curtains in guides to achieve 20 PSF* windload standard. Guides may be provided with integral windlock bars and removable bottom bar stops.
** Not applicable for high usage guide option.*

2.03 Brackets

A. Brackets will be of 3/16" [1/4"] minimum thick steel plates, with permanently sealed ball bearings. Designed to enclose ends of coil and provide support for counterbalance pipe at each end.

2.04 Counterbalance

A. Curtain to be coiled on a pipe of sufficient size to carry door load with deflection not to exceed .033" per foot of door span and to be correctly balanced by helical springs, oil tempered torsion type. Cast iron barrel plugs will be used to anchor springs to tension shaft and pipe.

B. Advanced performance with variable frequency direct drive motor without the use of helical oil tempered torsion spring.

2.05 Hood

A. Hood will be minimum 24-gauge [aluminum, 22 gauge B&S] [galvanized] [stainless steel] sheet metal, flanged at top for attachment to header and flanged at bottom to provide longitudinal stiffness. Hood will enclose curtain coil and counterbalance mechanism.

2.06 Finish

A. Shop coat of rust inhibitive primer on non-galvanized surfaces and operating mechanisms. Guides and bracket plates will be coated with a flat black prime paint. Aluminum finish to be [mill] [204R1 clear anodized] [bronze anodized]. Stainless steel finish available.
Curtain color will be [white] [gray] [beige] [brown] . Powder coating is available in197 RAL colors.

B. Advanced performance special hardness additive powder coat in [beige] and [gray] colors.

2.07 Operation

A. Door will be operated by means of [manual, lift-up] [chain hoist with gear drive reduction] [awning crank] [wall crank box] [motor operation]. Optional [electrical] [pneumatic] sensing edge to be attached to bottom bar to [stop and reverse] the door when it contacts an object during the closing cycle.

B. Advanced performance springless motor operation, variable frequency drive with NEMA4X control panel.

2.08 Weatherstripping

A. Air-Bar Extr-Tite doors will include flat slats, bottom astragal, surface guide weatherstrip, and internal hood baffle weatherstrip.

2.09 Locking

A. [Manual lift-up doors will have interior slide-bolts suitable for padlocks by others.] [Chain-hoist door will have chain keepers suitable for padlocks by others.] [Electric-motor operation doors will lock through the operator gearing.] [Cylinder locks can be provided with the doors.]

Note: When specifying locks on electric-motor operated doors, electric interlocks should also be specified to prevent operation when lock bolts are engaged in the guides, thus preventing damage to the curtain and/or operator.

2.10 Wind load

A. Wind load – minimum 20 psf per ANSI/DASMA 102-2003.

PART III – EXECUTION

3.01 Installation

A. General:
1. Install doors in accordance with manufacturer's instructions and standards. Installation shall be by an authorized Wayne Dalton representative.
2. Verify that existing conditions are ready to receive rolling door work.
3. Beginning of rolling door work means acceptance of existing conditions.

B. Install door complete with necessary hardware, jamb and head mold strips, anchors, inserts, hangers, and equipment supports in accordance with final shop drawings, manufacturer's instructions, and as specified herein.

C. Fit, align and adjust rolling door assemblies level and plumb for smooth operation.

D. Upon completion of final installation, lubricate, test and adjust doors to operate easily, free from warp, twist or distortion and fitting for entire perimeter.

Note: Architect may consider providing a schedule when more than one rolling door or opening type is required.

Distributed By:

For technical information, visit:
www.Wayne-Dalton.com/commercial

©2013 Wayne Dalton, a division of Overhead Door Corporation. Consistent with our policy of continuing product improvement, we reserve the right to change product specifications without notice or obligation. Item **333067**

Printed in USA